SAFETY ENGINEERING OF ANTHROPOGENIC OBJECTS

SAFETY OF AVIATION FUEL TRANSPORT AND DISTRIBUTION UNDER FIELD CONDITIONS

Czesław WOJDAT
Military University of Aviation, Dęblin, Poland
ORCID: 0000-0002-4445-1837

Abstract

The problem of delivering aviation fuel to military aircraft in the field includes not only ensuring the appropriate fuel quality, but also the safety of its transport. Delivering the appropriate amount of fuel to a specific place, irrespective of the terrain conditions, brings many difficulties. They are related to the availability of the appropriate transport equipment that would enable the safe delivery of high-quality aviation fuel to aircraft, regardless of the condition of access roads to airports and airfields. The article analyzes mobility capabilities of the available transport equipment, as well as its suitability and functionality under field conditions.

Key words: safety, aviation, transport, distribution, fuels

INTRODUCTION

The operation of modern military equipment, and aircraft in particular, requires the use of a wide range of liquids and lubricants. The basic operating liquid is aviation fuel. Modern aviation technology requires using large amounts of fuel meeting high quality requirements. Aviation fuel is to be delivered to the right location at the right time. This is especially important in the case of supplying military helicopters, which may be refueled in the field. It should also be kept in mind that unpaved airfields may be used by cargo aircraft as well. This puts greater demands on the logistics services, especially in terms of the necessity to deliver much larger amounts of fuel. In order to ensure timely delivery of fuel to an airfield the supply services must have at their disposal appropriate transport equipment, having the capability of delivering the required amount of high-quality fuel, but mainly enabling quick and safe fuel delivery to the aircraft refueling area.

Depending on the missions performed, fuel requirements for particular aircraft will be very different. Table 1 shows the fuel system capacity of selected aircraft and the average estimated fuel requirements.

Aircraft Type	Fuel system capacity	Estimated average refueling requirement
Mi-17	1.870	1.310
W-3	1.700	1.190
Mi-24	2.130	1.490
AH-64E Apache	1.422	990
H225M Caracal	2.810	1.960
UH-60A Black Hawk	2.232	1.560
C-130E Hercules	34.931	17.400
CASA C-295	7.650	3.820

Table 1. *Fuel tanks capacity of selected aircraft and estimated requirements for a single refueling* [Wojdat, 2019]

Source: Author's own work

The amounts of fuel to be delivered to a specified airfield will depend on a number of factors, such as:

- aircraft type;
- number of aircraft in a formation to operate from a given airfield;
- missions to be performed by those aircraft;
- period of time in which the formation will be operating from a given airfield;
- the amount of distribution equipment at our disposal and its transport capabilities;
- distance from the nearest supply source and resupply options.

Depending on the aircraft formation size: single flight, several flights, or a squadron, the number of aircraft may range from 3 to 16. For helicopter formations, single fuel requirements will be from 3,000 liters up to even 32,000 liters, whereas in the case of a cargo aircraft squadron, fuel requirements may be even greater. From the perspective of the transport capabilities (capacity) of the distribution equipment, ensuring the delivery of 32,000 liters of fuel to the aircraft should not pose problems. However, when the aircraft refueling process takes place in the field, where enemy operations may affect it, this process must take place in different regimes. Refueling operation must be carried out in the shortest time possible, both for an individual aircraft and the entire formation. This will require a much greater amount of distribution equipment. In practice, it is the most advantageous to have as

many tanker-dispensers as is the number of aircraft to be refueled. Then we will ensure the shortest refueling time with no necessity for a single tanker to approach more than one helicopter or airplane. Less distribution equipment prolongs refueling operations, delays the return of air equipment to combat operations, but also increases the risk of destroying the aircraft while still on the ground.

It is obvious that simultaneous refueling of a dozen or so helicopters or airplanes will occur extremely rarely. It will be much more likely that helicopters will be landing at one- or two-minute intervals. Taking into consideration a number of preparatory activities for refueling, refueling duration, and post-refueling activities, refueling an individual helicopter will take from 6 to 8 minutes. During that time, more helicopters will land for refueling. This requires proper coordination of refueling and proper deployment of distribution equipment in order to shorten their travel time to individual aircraft, and reduce the time during which they remain at the airfield.

1. Vehicles for transporting and distribution of liquid fuels

It is clear from the above analyzes that the amount of necessary transport and distribution equipment is dependent on the expected number of aircraft. The anticipated amounts of fuel necessary to restore combat readiness of the aircraft are also important. If we are speaking about only a one-time refueling and no further refueling will be necessary, there is no need for the equipment to have large tank capacities. However, when there is only limited amount of equipment and the fuel requirements of airplanes and helicopters are considerable, it is necessary to have equipment with a greater tank capacity.

Basic transport and distribution equipment for aviation fuel are heavy duty aviation fuel tanker trucks with a large capacity of 20-33 thousand liters. Those vehicles are, however, unsuitable for moving on unpaved roads. In order to meet the needs of aviation in the field, it is necessary to have tanker trucks that can move both on paved roads and off-road.

According to the concept proposed by Prof. J. Brach [Simiński, 2015], the following criteria should be taken into account in classifying transport assets used in the military:

- mobility – determining the vehicle's ability to tackle terrain obstacles;
- load capacity - transport (load-carrying) capability of a vehicle both on paved roads and off-road;
- armor - compliance with the requirements of the appropriate NATO standards

The criterion of mobility has been divided into four subgroups: low, medium, high and very high. Low mobility vehicles are vehicles with one driven axle which are used for moving on paved roads, but not suitable for moving on unpaved roads. The highest category of vehicles adapted to moving under the most difficult off-road conditions comprises tracked vehicles. The category for which there is demand from various types of military formations is a subgroup marked with the M3 code – high mobility vehicles. Vehicles belonging to that subgroup can move on paved and unpaved roads, the latter being both muddy and swampy. They can also move off-road and ford in water up to certain depths without any additional preparation.

The load capacity criterion has been divided in accordance with vehicle configuration - solo and combination vehicles. In typical trucks, there is a distinction between full load capacity for traveling on paved roads and limited load capacity for off-road conditions. As far as tanker trucks are concerned, however, it is extremely important that their load capacity (the amount of fuel that can be transported) should be the same regardless of the terrain conditions, without reducing the capabilities of mobile tankers.

The armor criterion is described by 6 subgroups, from subgroup 1 containing soft skinned or scantily armored vehicles to group 6 with the highest degree of ballistic and anti-mine protection as used for general purpose vehicles. [Simiński, 2015]

Tanker trucks can be equipped with cab protection and there are also solutions preventing the fuel tank from exploding in the event of a hit by small arms fire or a fragment. There are solutions allowing the tank to self-seal in the event of minor leaks.

2. Requirements for tanker trucks having an off-road chassis

Reaching high mobility by military vehicles is connected with the achievement of the highest possible values for the following parameters: approach and departure angles, ramp angle, wheelbase, ground clearance, and front and rear overhangs.

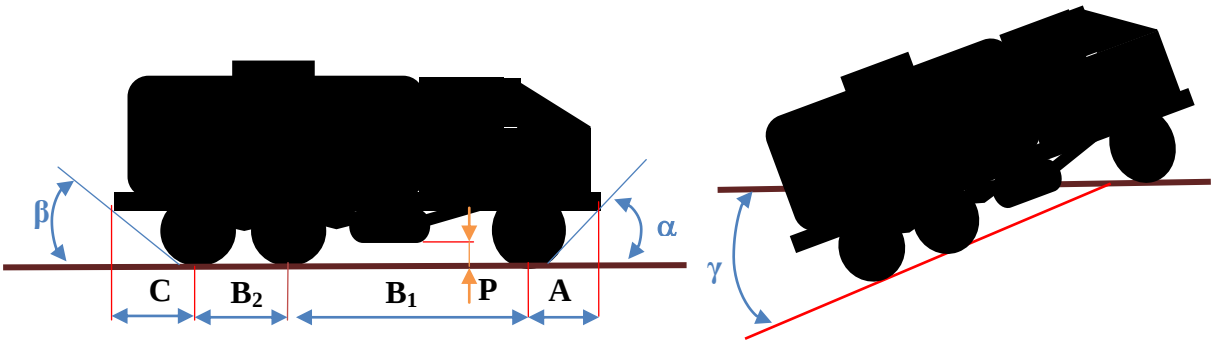

Figure 1. *Parameters describing high mobility vehicles where:*
α - approach angle, β - departure angle, γ - ramp angle, B_1, B_2 - wheel track, P – ground clearance, A - front overhang C - rear overhang
Source: Author's own work

Other parameters determining the mobility of a tanker truck are the height, width (wheel track) and the location of the center of gravity (CG). When selecting a vehicle with high ground clearance, large approach and departure angles, we raise the CG, which, given the specificity of the load being fuel, has a particularly adverse effect on the vehicle stability.

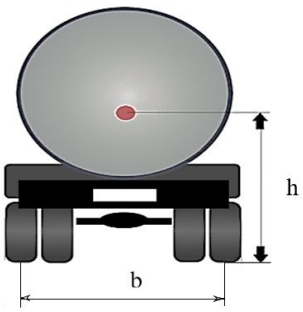

Figure 2. *Center of gravity (CG) location in a tanker truck* where:
b – wheel track h – CG height
Source: Author's own work

When moving on paved roads, but particularly when when moving off-road, the vehicle may become unstable and, in the worst case scenario, it may overturn or even roll over. Depending on the driving and road conditions, the vehicle may lose longitudinal or lateral stability. Losing longitudinal stability due to the liquid sloshing in the tank occurs during sudden braking, acceleration, or during moving uphill or downhill. Longitudinal fuel sloshing, especially in aviation fuel trucks with single-chamber tanks, can reduce traction on the steered

wheels and reduce the driver's control over the vehicle. This type of sloshing is reduced by using openwork partitions inside the tank (baffles). Longitudinal sloshing is the more dangerous the less fuel there is in the tank. This causes the movements of the fuel in the tank to be more rapid.

What is more dangerous for the vehicle and its load is the loss of lateral stability.

One of the fundamental ways to increase the safety of fuel transportation by tanker trucks is to lower the CG of the vehicle. Tanker trucks are vehicles with a special construction, especially those intended for off-road use. Ensuring high mobility causes high location of the CG. To reduce the risk of losing stability and, consequently, of the vehicle rollover, the CG should be situated as low as possible. By increasing the wheel track, we increase the width of the vehicle. However, account must be taken of road traffic requirements, the allowable dimensions of the load gauge (railroad), or the width of the aircraft cargo space. For these reasons, the maximum width of the vehicle is in fact limited. By choosing the right shape of the tank for transporting fuel, however, we can also move the position of the vehicle's CG significantly up or down.

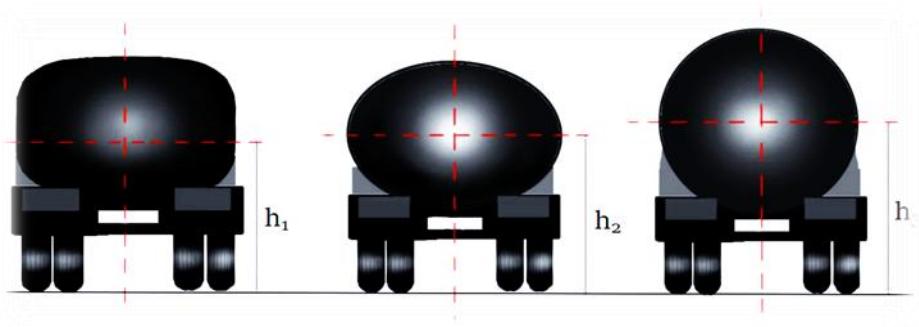

Figure 3. *The location of the center of gravity depending on the tank shape, where: h_1 – CG height of the modified oval tanker truck, h_2 – CG height of the elliptic tanker truck, h_3 – CG height of the cylindrical tanker truck.*

Source: Author's own work

The most optimum model should be a vehicle which is wide and at the same time relatively low, which in turn may limit the capabilities regarding the size and capacity of its tank. The fundamental condition for lateral stability is to ensure the truth of the following inequality:

$$b > h \text{ – lateral stability condition}$$

The optimum tank capacity, taking into consideration the dimensions of the tank, the weight of the fuel transported, as well as the construction and the mobility of the vehicle, is approx. 10,000 l (≈2,640 gal). In the armed forces of various countries, the most frequently used tankers with off-road chassis have tanks with a capacity of 9,000 ÷ 10,500 l, which can carry 7,200 ÷ 8,000 kg of fuel. Depending on the design and armor, these are vehicles with a permissible total weight of 25,000 ÷ 35,000 kg.

An extremely important parameter is the roll angle of the vehicle which determines its mobile capabilities, but also the safety of the transported load, and handling. [Gontarz at al., 2012] This parameter determines the limit value of lateral inclination angle beyond which the vehicle loses its stability. In a vehicle with poor driving stability, after exceeding a certain speed limit, skidding effect starts. Such a vehicle reacts to the steering wheel inputs (turns) incorrectly and tends to turn under the influence of external stimuli, e.g. crosswind gusts. [Prochowski, and Kozioł, 2011]

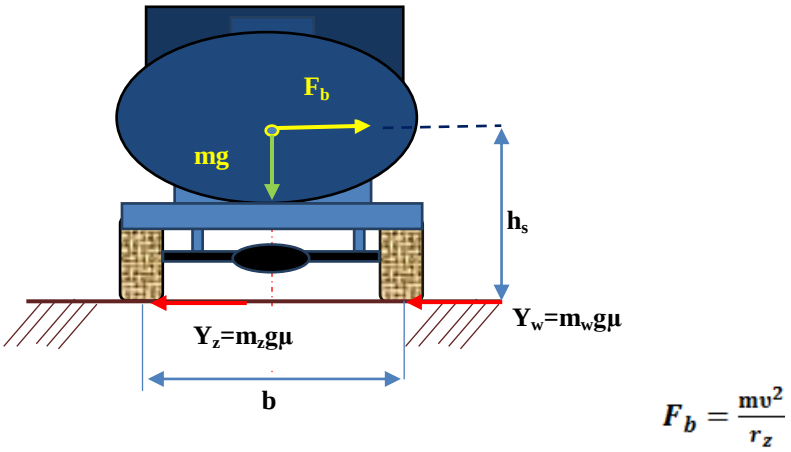

Figure 4. *Distribution of forces acting on a vehicle in a curve where:*
F_b – centrifugal force of inertia; μ – adhesion coefficient; h_s – height of the vehicle's center of mass; b – wheel track; r_z – curve radius; g – gravitational acceleration
Source: Author's own work

It is extremely dangerous when driving off-road, where the traction of the vehicle's tires is worse than on paved roads. In special vehicles (including tanker-dispensers) with a relatively high center of mass shifted towards the rear axle, during lateral acceleration, there is a risk of lateral inclination (roll) of the body and rear axles in relation to the front axle. In such a situation, the inner rear wheels are raised, and if this reaction is not interrupted, the vehicle

overturns. Because of the design of the suspension and the frame (stiffness of the components), the driver of the vehicle does not feel the signals of impending danger sufficiently enough, mainly due to the fact that the cab is initially only slightly tilted. When the tilt of the cab is noticeable, no reaction from the driver is possible. In the case of the vehicle moving on unpaved roads or off-road, where the traction of off-road tires is much weaker than in the case of hardened surfaces, the risk of the vehicle overturning is greater. [Simiński, 2015] The adhesion coefficient is dependent on external factors, i.e. type and condition of surface, type of tires, pressure in the tires, and current weather conditions. [Argyris, ad al., 2017] Selected adhesion coefficients for off-road tires at low and medium speeds are presented in Table 2.

Pavement type	Pavement condition	Off-road tires
concrete, asphalt	dry wet mud-covered	0.70 – 0.80 0.50 – 0.60 0.25 – 0.45
natural field-stone pavement gravel pavement	dry wet	0.60 – 0.70 0.40 – 0.55
unpaved road	dry wet with rain during the thaw	0.50 – 0.60 0.35 – 0.50 0.20 – 0.30
sand	dry moist	0.20 – 0.30 0.40 – 0.50
clay	dry moist (plastic) moist (liquid)	0.40 – 0.50 0.30 – 0.45 0.15 – 0.25
snow	loose compacted (with vehicle wheels)	0.20 – 0.40 0.30 – 0.50
icy	subzero temperature	0.05 – 0.10

Table 2. *Adhesion coefficient for various pavement types [Simiński, 2015]*

Maximum speed V_{max}, at which the wheels lose the contact with the surface and the vehicle overturns while moving along a curve is dependent on the design features of the vehicle (b, h_s) and the location of the load. It is necessary that that speed should be greater than the skid speed V_{gr}.

$$V \rightarrow Vgr = \sqrt{\mu g r_z}$$

the following relationship must be true:

$$V_{max} > V_{gr}$$

hence the following design condition:

$$\mu < \frac{b}{2h_s}$$

Fulfilling the above condition will ensure a safety margin for the vehicle user. Increasing the vehicle speed or reducing the turning radius will make the vehicle "signal" the risk of overturning.

When the vehicle is moving on slopes, the inclination of the ground surface has an adverse effect on the vehicle stability, and there is also a risk of the vehicle sliding down the slope. Here, the type of the ground surface, its adhesion and weather conditions have a decisive effect. In each of the situations presented here, the condition of the vehicle's tires, their pressure, and the appropriate tread pattern and its height are of the utmost importance. [Simiński, 2012] [Winkler, 2000]

In the case of tanker trucks operated in peacetime, in accordance with the provisions of the ADR (International Carriage of Dangerous Goods by Road) agreement, the extent to which tanker trucks may transport liquids is limited. The tanker truck must not move if its tank is filled to 20-80% of its capacity. [ADR, 2017] Transporting the amount of fuel specified above may cause the tanker truck to overturn, which applies particularly to off-road vehicles. Obviously, in the event of threats or in wartime environment, it is important to supply fuel to combat equipment and those restrictions will not be respected then. This will, however, require maintaining appropriate driving regimes, especially in uneven terrain and steep slopes.

Now we come to the extremely important element of fuel transportation for the needs of the armed forces. Assuming that we have at our disposal the appropriate transport and distribution equipment, adapted to move on unpaved roads and off-road, it is also necessary to have the appropriate personnel to drive and operate that equipment.

Most of the modern European and world armed forces have opted for professionalism (career soldiers). Specialists with appropriate training and experience are assigned to operate and maintain military equipment, including transport equipment. Despite that, it is impossible to avoid road accidents, even serious ones, involving overturning fuel tankers. [Winkler, 2000]

Most of them are caused by human error. Movement of transport equipment under hazardous conditions will generate additional factors making the proper actions of vehicle drivers difficult. When planning to secure the operation of a helicopter formation, one should take into consideration delays or equipment and fuel losses caused by failures, accidents (tanker overturning) or the activity of the enemy. Taking such risks into consideration, the personnel securing air operations must anticipate the possibility of replacing damaged or destroyed vehicles.

3. Tankers-dispensers in the Polish Armed Forces

In the Polish Armed Forces only two types of tanker-dispensers are used that are classified as vehicles capable of moving on unpaved roads:

1. Tanker-dispenser truck with a capacity of 5 m^3 on the 6x6 Star 266 (CD-5) off-road chassis;
2. Tanker-dispenser truck with a capacity of 10 m^3 on the 6x6 Jelcz P662 D.34 (CD-10) off-road chassis;

The first vehicle, designed in the early 1970s, is gradually being phased out due to the outdated design of the chassis and the dispensing part. Its tank has small capacity (4,500 l) and is manufactured of inappropriate material. [Zakrzewski, 2015]

Figure 5. *Tanker-dispenser truck with a capacity of 5 m^3 (CD-5) on the 6x6 Star 266 off-road chassis;*

Source: Author's archive

The other vehicle is of a more contemporary design form the beginning of the 21st century. The vehicle is equipped with a more powerful engine that meets applicable requirements for vehicles carrying and dispensing liquid fuels (tank capacity: 9,600 l). The vehicle is adapted to have off-road and fording capability. In spite of its outdated design, the vehicle is highly valued by users because of its good off-road characteristics. [Wojdat, 2019]

Figure 6. *Tanker-dispenser truck with a capacity of 10 m^3 (CD-10) on the Jelcz P662 D.34 off-road chassis;*

Source: Author's archive

Characteristic parameters determining the mobility of both vehicles are presented in Table 3.

Parameter	**CD-5**	**CD-10**
Vehicle length	6.820 mm	8.670 mm
Vehicle width	2.500 mm	2.550 mm
Vehicle height	2.660 mm	3.335 mm
Fording depth (without/with vehicle preparation)	1.2 m / 1.8 m	1.2 m
Approach/departure angle	39^0 / 46^0	36^0 / 27^0
Ground clearance	330 mm	317 mm
Engine power	110 kW	259 kW
Max. speed	80 km/h	85 km/h

Table 3. *The most important parameters determining the mobility of tankers-dispensers. [Instrukcja, 2012]*

CD-10 tanker truck, despite its larger tank, newer design and more powerful engine compared to the outdated design, has weaker mobility parameters. In peacetime, those tanker

trucks are used in air force units stationed at permanent airports. Because of the necessity to move on concrete pavements and to perform frequent turns and U-turns, it suffers form a very intense wear of tires, especially on the rear axles. The lifetime of tires is even several times shorter than it would appear from their mileage and age. The vehicle is poorly rated by drivers and maintenance personnel. Particular attention should be paid to the record of the vehicle manufacturer in the operating manual, which says that driving in difficult conditions should be minimized due to the transverse sloshing of the carried fuel when the tank is not full. [Instrukcja, 2012] In the last few years, there have been several road accidents involving CD-10 tankers, in three of which a tanker overturned. This confirms the manufacturer's reservations about the lateral instability of the vehicle when one of the wheels enters the soft shoulder of the road. The drivers' experience and skills, their resistance to stress and ability to concentrate while driving are also important.

CONCLUSIONS

Being in possession of the appropriate equipment for transporting liquid fuels, particularly aviation fuel, will determine the effectiveness of military aviation operations, especially when operating from unpaved airfields. Delivering the right quantity and quality of fuel safely to a specified location, will be a priority condition for logistic services. Accessing aircraft refueling area with CD-10 tankers safely via unpaved roads and off-road will pose a major threat since that vehicle is so sensitive to uneven road surfaces. No mention has been found in the available literature of the tests carried out to verify lateral stability of that vehicle. On the other hand, in the case of other European manufacturers of tanker trucks for the military, detailed data can be obtained on climbing inclines (angles of approach and departure), and also on the allowable tilt of the vehicle. This may point out to low values of these parameters or failure to perform such measurements by the vehicle manufacturer.

In spite of the fact that the CD-10 tanker can transport twice as much fuel and, as it has already been mentioned, it is a newer design, the identified defects and weaknesses should be an impulse to carry out work on its modernization, or a new vehicle with a larger tank capacity, but with at least not worse mobility parameters ought to replace the CD-5 tanker truck. The introduction of new design solutions should not worsen the conditions of servicing the tanker-dispensers, as it is the case with the CD-10 whose time of preparation for refueling and the time necessary to perform post-refueling activities is much longer than that of the CD-

5 tanker. For the CD-10, the duration of the pre- and post-refueling activities is 6 minutes longer than that for the CD-5. Performing many pre-refueling activities may result in their improper performance, or non-performance, which may result in improper operation of the tanker or its failure. In the event of a threat, there is a high risk that the aircraft refueling process will not be completed in the expected time. The introduction of new designs and solutions must not reduce the effectiveness of logistic services.

REFERENCES

1. ADR Agreement (2017–2019), European Agreement on International Carriage of Dangerous Goods by Road ADR 2017–2019
2. Argyris S. Papadogiannis, Pavlos G. Michaelides, George A. Michalos, Thomas G. Chondros. Road Tanker Design and Dynamic Response Simulation. International Review of Mechanical Engineering (IREME). Special Issue on „Advances in Modern Mechanical Engineering Research" Vol. 11 N. 5, 2017 DOI: 10.15866/ireme.v11i5.11776
3. Gontarz A., Czerwiński D., Pogorzelski I., Jurecki L., Bezpieczeństwo samochodów pożarniczych w czasie jazdy i na miejscu akcji. Monografie CNBOP-PIB 2012, Józefów 2012
4. Instrukcja obsługi i użytkowania cysterny dystrybutora CD-5. SHL. Kielce 1987
5. Instrukcja obsługi. Samochód cysterna dystrybutor CD-10. Celtech Sp. z o.o. Poznań 2012
6. Prochowski L., Kozioł S., Zagrożenia w ruchu pojazdów z wysoko położonym środkiem masy. Problemy eksploatacji nr 2/2011. Wyd. Instytutu Technologii Eksploatacji PIB, Radom, 2011
7. Simiński P. Wojskowe pojazdy kołowe. Bel Studio Sp. z o.o., Warszawa 2015
8. Simiński P. Zwrotność pojazdów. Bel Studio Sp. z o.o., Warszawa 2012
9. Winkler Ch. Rollover of Heavy Commercial Vehicles. Research Review. University of Michigan Transportation Research Institute Vol. 31 N. 4, 2000
10. Wojdat Cz. Means of Transport and Distribution System of Aviation Fuels in State Aviation. Scientific Journal of Silesian University of Technology. Series Transport. Vol. 104. Katowice 2019 DOI: 10.20858/sjsutst.2019.104.16
11. Zakrzewski B. Zastosowanie samochodów ciężarowych w logistyce Wojska Polskiego na przykładzie samochodu ciężarowego STAR 266. Eksploatacja 2197 12/2015 ITS Warszawa 2015. The use of Trucks in the Logistics of the Polish Army With the Example of the Truck Star 266